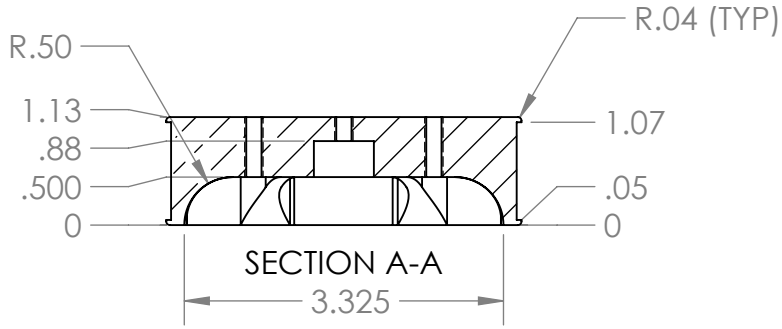

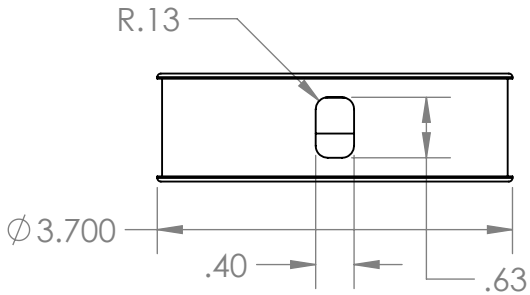

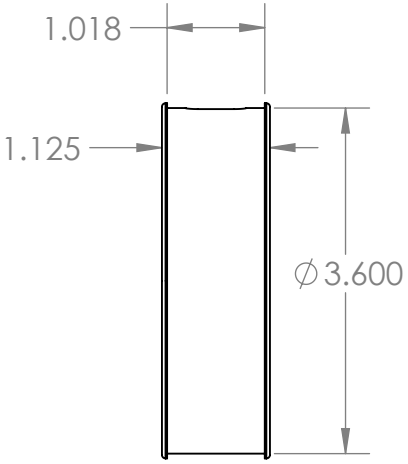

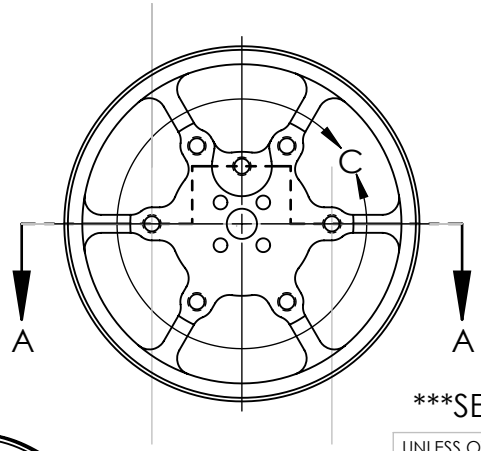

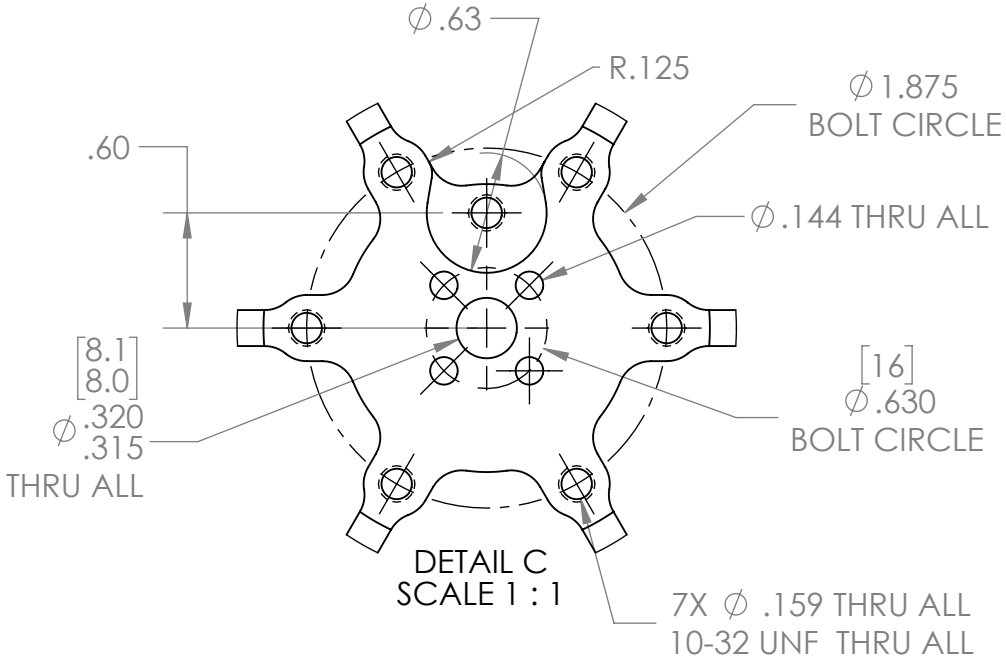

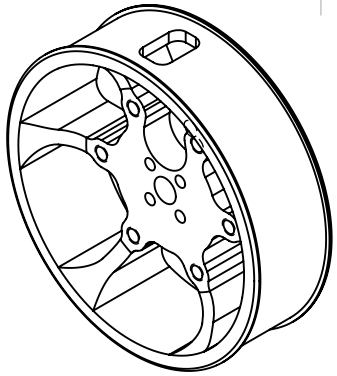

SEE CAD FOR ADITIONAL TOOLPATH INFORMATION

UNLESS OTHERWISE SPECIFIED:		NAME	DATE
DIMENSIONS ARE IN INCHES TOLERANCES: FRACTIONAL ±1/32 ANGULAR: MACH ±1° BEND ±5° ONE PLACE DECIMAL ±0.1 TWO PLACE DECIMAL ±0.01 THREE PLACE DECIMAL ±0.005	DRAWN	AB	11/8/17
	CHECKED	NM	11/9/17
	ENG APPR.		
	MFG APPR.		
INTERPRET GEOMETRIC TOLERANCING PER:	Q.A.		
MATERIAL 6061-T6 ALUMINUM	COMMENTS: DUAL DIMENSIONS ARE IN MILLIMETERS.		
FINISH TUMBLED			
DO NOT SCALE DRAWING			

AndyMark

TITLE:

4" Perf. Wheel Nub Mount

SIZE	DWG. NO.	REV
A	am-3612	1

SCALE: 1:2 | WEIGHT: | SHEET 1 OF 1

5 4 3 2 1